Locker System Base

We recommend building the locker system on a baseplate, as it is used for high rack construction outdoors.

Baseplate with connection box* for electricity and internet for use of between 2 to 10 cabinet modules.

Number of Locker Modules	Width AB of the Cabinet System	Width of Base FB
2	900	1.100
3	1.300	1.500
4	1.700	1.900
5	2.100	2.300
6	2.500	2.700
7	2.900	3.100
8	3.300	3.500
9	3.700	3.900
10	4.100	4.300

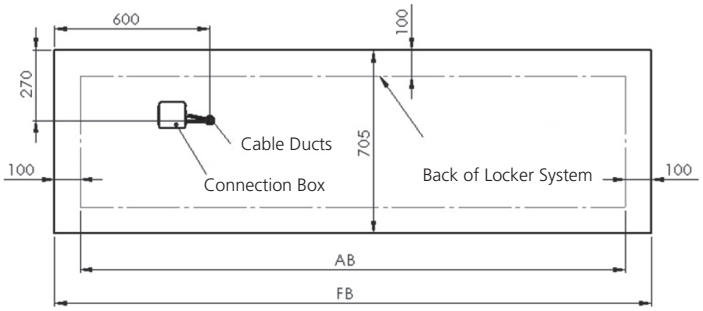

Baseplate with connection box* for electricity and internet for use of between 11 to 20 cabinet modules.

Number of Locker Modules	Width AB of the Cabinet System	Width of Base FB
11	4.600	4.800
12	5.000	5.200
13	5.400	5.600
14	5.800	6.000
15	6.200	6.400
16	6.600	6.800
17	7.000	7.200
18	7.400	7.600
19	7.800	8.000
20	8.200	8.400
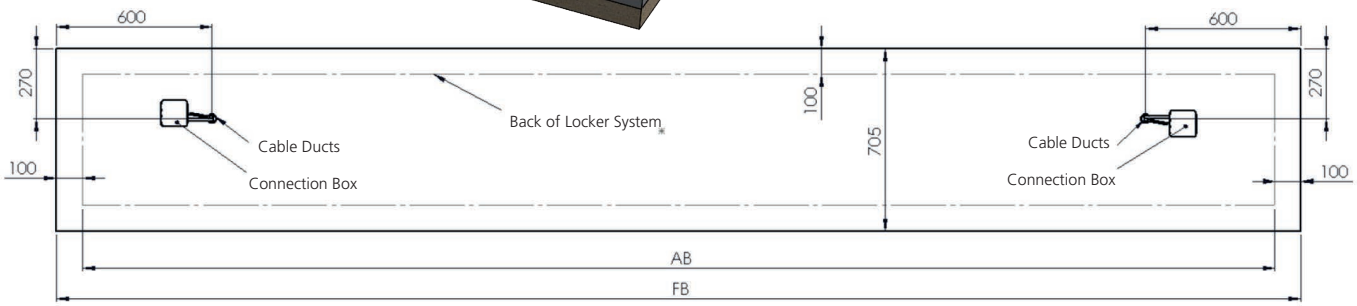
* As an alternative to the connection box, cables can also protrude directly from the foundation, which should then have a cable length of 10m.